SIC SCHOTTKY BARRIER DIODE

Reverse Voltage - 1200 V

Forward Current - 8 A

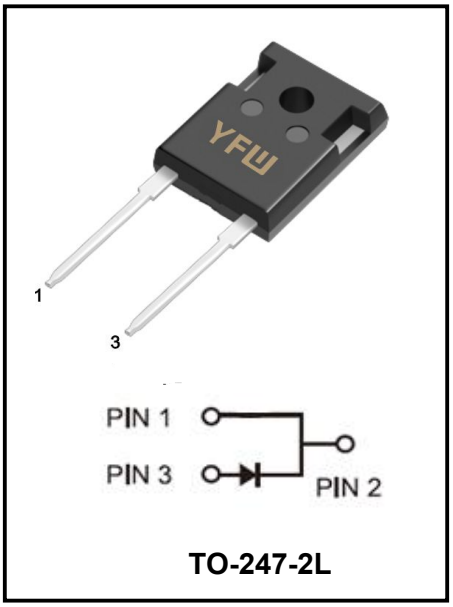

TO-247-2L

FEATURES

- 1200-Volt JBS Rectifier
- Zero Reverse Recovery
- Positive Temperature Coefficient on VF
- Temperature-Independent Switching Behavior
- Extremely Fast Switching

APPLICATIONS

- Power Factor Correction
- Solar inverters
- Uninterruptable power supplies
- Motor drives
- DC charger

BENEFITS

- High-speed switching
- Low heat dissipation requirements
- Reduced EMI
- High-reliability

Maximum Ratings at Ta=25°C unless otherwise specified

Parameter	Test Conditions	Symbol	Value	Unit
Repetitive Peak Reverse Voltage	T_C = 25℃	V_{RRM}	1200	V
Continuous Forward Current for Rth(j-c,max)	T_C = 25℃	I_F	27	A
	T_C = 110℃		17	
	T_C = 150℃		8	
Non-Repetitive Forward Surge Current, Sine Half-Wave	T_C = 25℃, tp = 10ms	I_{FSM}	70	A
	T_C = 110℃, tp = 10ms		60	
Repetitive Forward Surge Current, Sine Half-Wave	T_C = 25℃, tp = 10ms	I_{FRM}	60	A
	T_C = 110℃, tp = 10ms		50	
Single Pulse Avalanche Energy	T_C = 25℃, L= 0.5mH, V_{DD}= 50V, I_peak =19A	E_{AS}	90	mJ
Operating Temperature Range	-	T_J	175	℃
Storage Temperature Range	-	T_{STG}	-55 to +175	℃
Typical Thermal Resistance (Note1)	-	$R_{\theta JC}$	0.98	℃/W

Note1: Thermal resistance from Junction to case per leg mounted on heatsink.

Electrical Characteristics unless otherwise specified

Parameter		Symbol	Value			Unit
Forward Voltage Drop(Note2)			Min.	Typ.	Max.	
I_R = 100μA		V_{DC}	1200	-	-	V
at I_F=8A	TA=25°C	V_F	-	1.38	1.8	V
	TA=175°C		-	1.95	-	
Maximum Reverse Current at V_R=1200V	TA=25°C	I_R	-	1.94	140	μA
	TA=175°C		-	16	-	
Total capacitive charge	VR = 800V	Q_C	-	43	-	nC
Total capacitance	VR = 1V, f = 1MHz	C	-	445	-	pF
	VR = 400V, f = 1MHz		-	40	-	
	VR = 800V, f = 1MHz		-	35	-	
Capacitance stored energy	VR = 800V	E_C	-	13	-	μJ

Note2:Pulse test: 300 μs pulse width, 1 % duty cycle

RATINGS AND CHARACTERISTIC CURVES

Figure 1. V_F Typical Forward Characteristics

I_F = 0~20A

T_{VJ} ranges from -55 ℃ to 175 ℃

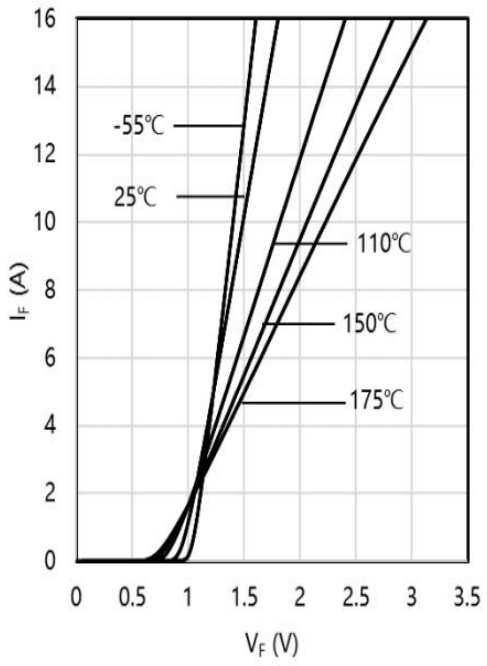

Figure 2. I_R Typical Reverse Characteristics

V_R = 0~1200 V

T_{VJ} ranges from -55 ℃ to 175 ℃

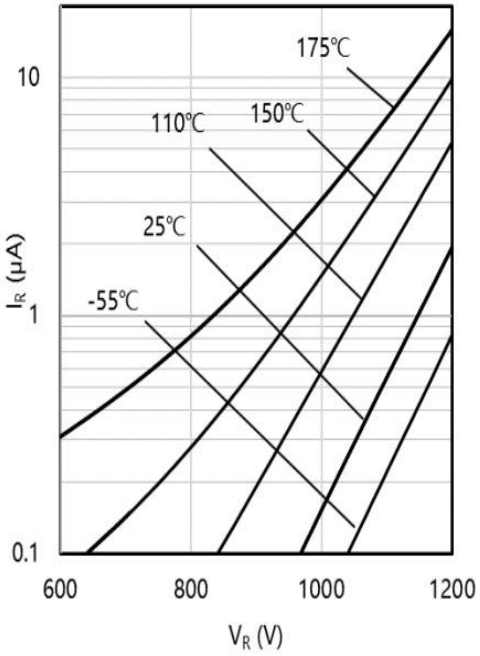

Figure 3. Total Capacitance Charge Characteristics

V_R = 0~800 V

T_{VJ} = 25 ℃

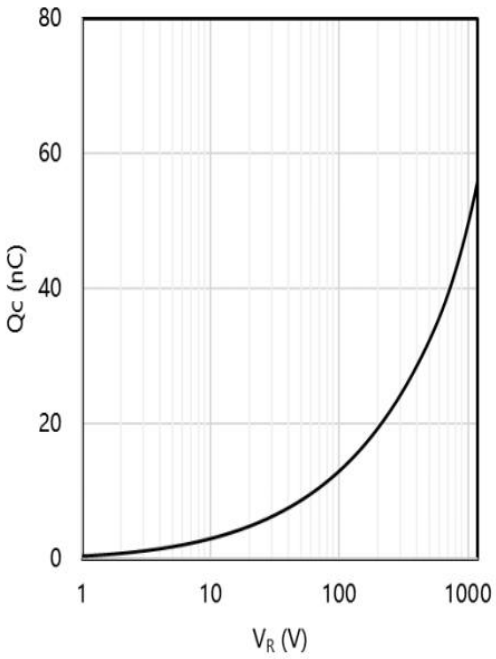

Figure 4. Total Capacitance Characteristics

V_R = 0~1000 V

T_{VJ} = 25 ℃

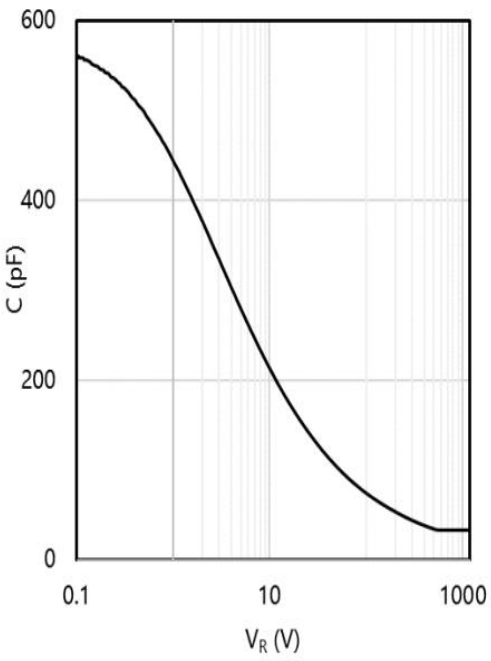

RATINGS AND CHARACTERISTIC CURVES

Figure 5. Typical capacitively stored energy as function of reverse voltage

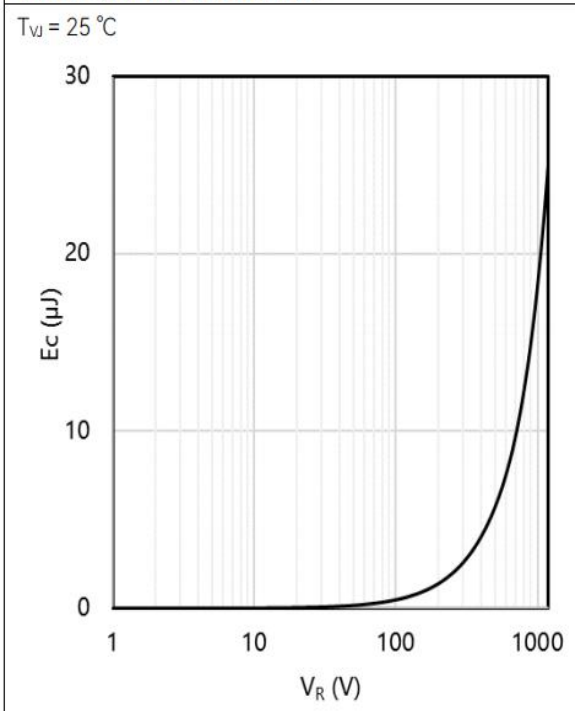

Figure 6. Power dissipation as function of case temperature

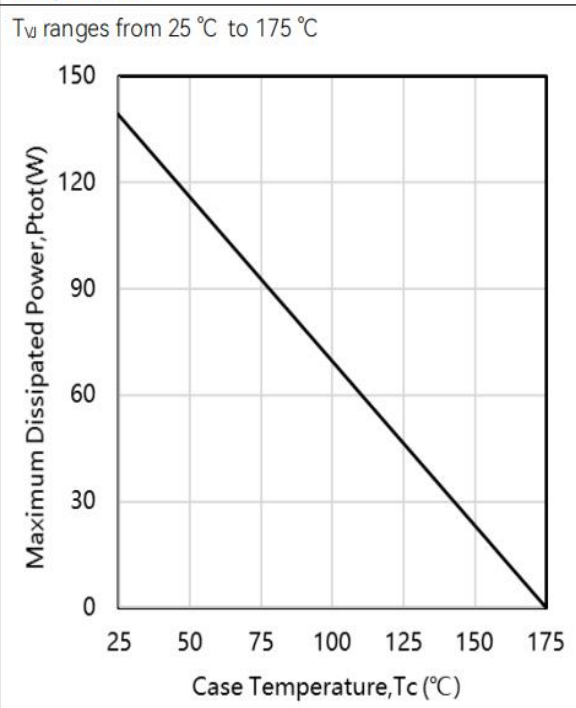

Figure 7. Max. transient thermal impedance, $Z_{th,j-c}=f(t_P)$, parameter: $D=t_P/T$

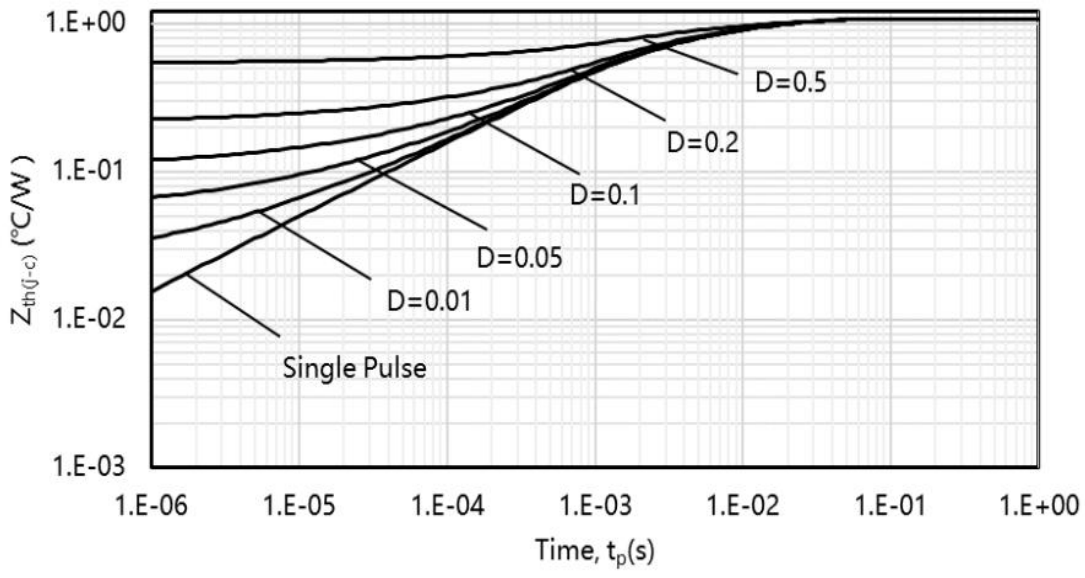

Marking Diagram

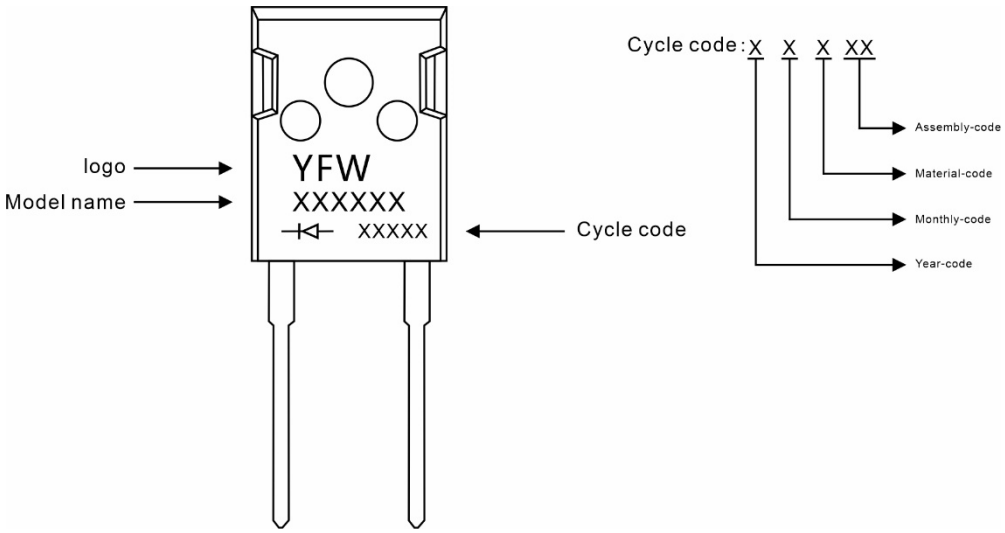

Ordering information

Model name	Package	Unit Weight	Base Quantity	Packing Quantity
YFWD308120W	TO-247-2L	0.209oz(5.93g)	30pcs/tube	600PCS/Box 3000PCS/Carton

Package Dimensions

TO-247-2L

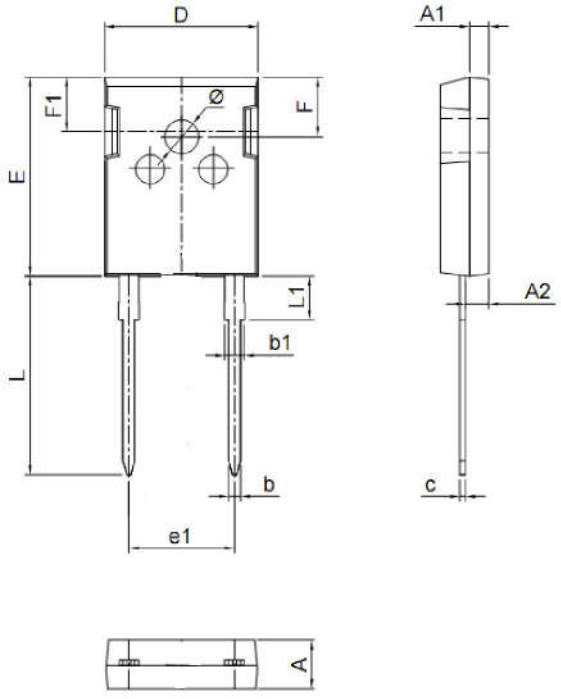

Symbol	Dimensions in mm		Dimensions in Inch	
	Min.	Max.	Min.	Max.
A	4.90	5.10	0.193	0.201
A1	1.90	2.10	0.075	0.083
A2	2.29	2.54	0.090	0.100
b	1.00	1.40	0.039	0.055
b1	2.00	2.20	0.079	0.087
c	0.50	0.70	0.020	0.028
D	15.75	16.05	0.620	0.632
E	20.20	20.80	0.795	0.819
e1	10.90 (BSC)		0.429 (BSC)	
F	6.05	6.25	0.238	0.246
F1	5.80	6.00	0.228	0.236
L	20.10	20.40	0.791	0.803
L1	4.05	4.35	0.159	0.171
Φ	3.50	3.70	0.138	0.146

Disclaimer

The information presented in this document is for reference only. GuangDong Youfeng Microelectronics Co.,Ltd. reserves the right to make changes without notice for the specification of the products displayed herein to improve reliability, function or design or otherwise. The product listed herein is designed to be used with ordinary electronic equipment or devices, and not designed to be used with equipment or devices which require high level of reliability and the malfunction of with would directly endanger human life (such as medical instruments, transportation equipment, aerospace machinery, nuclear-reactor controllers, fuel controllers and other safety devices),YFW or anyone on its behalf, assumes no responsibility or liability for any damages resulting from such improper use of sale. This publication supersedes & replaces all information previously supplied. For additional information, please visit our website https://www.yfwdiode.com, or consult YFW sales office for further assistance.